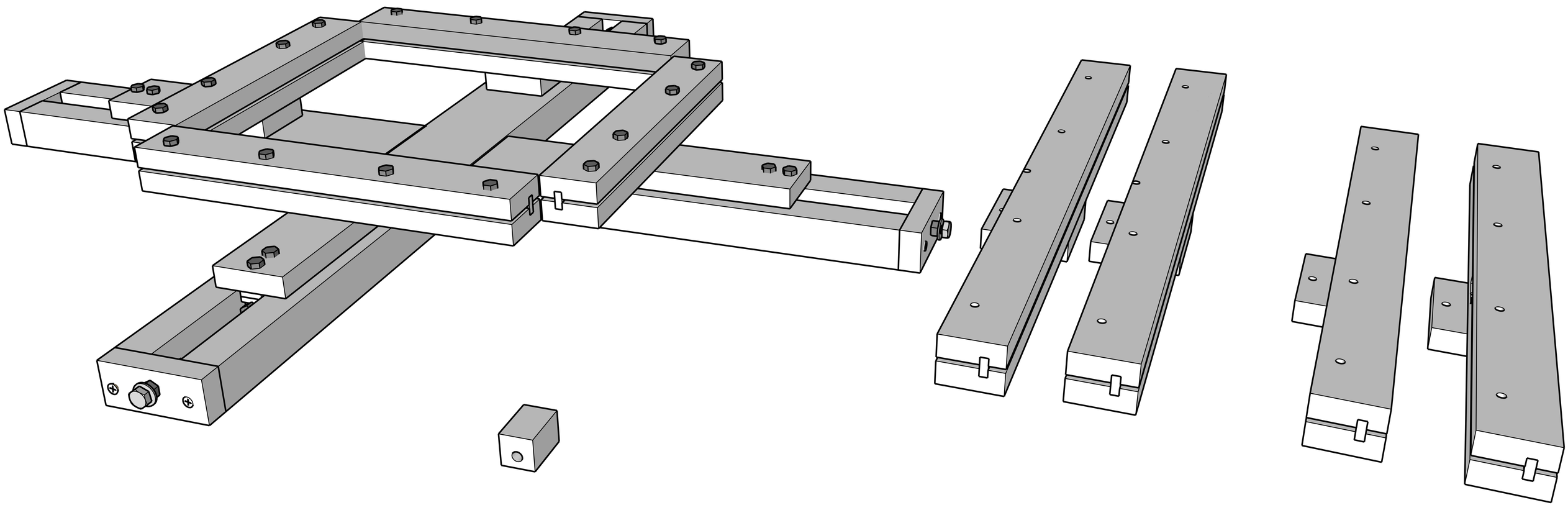

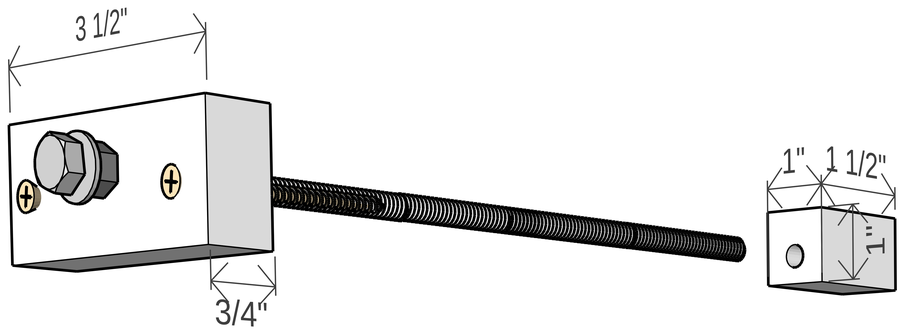
3 1/2"
1"
1 1/2"
1"
3/4"

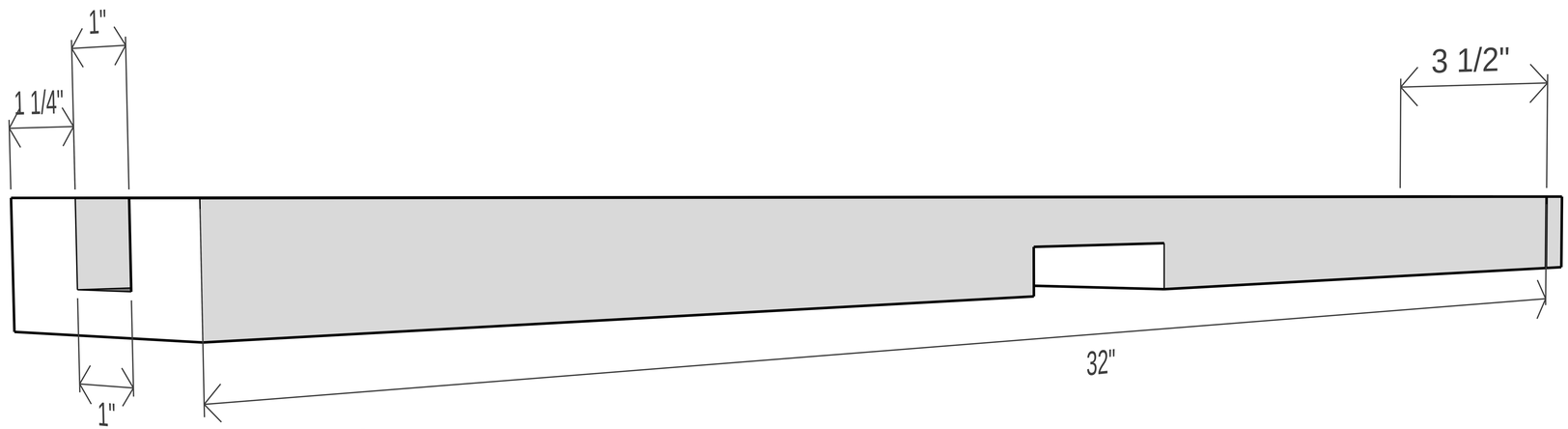
1"
1 1/4"
3 1/2"
32"
1"

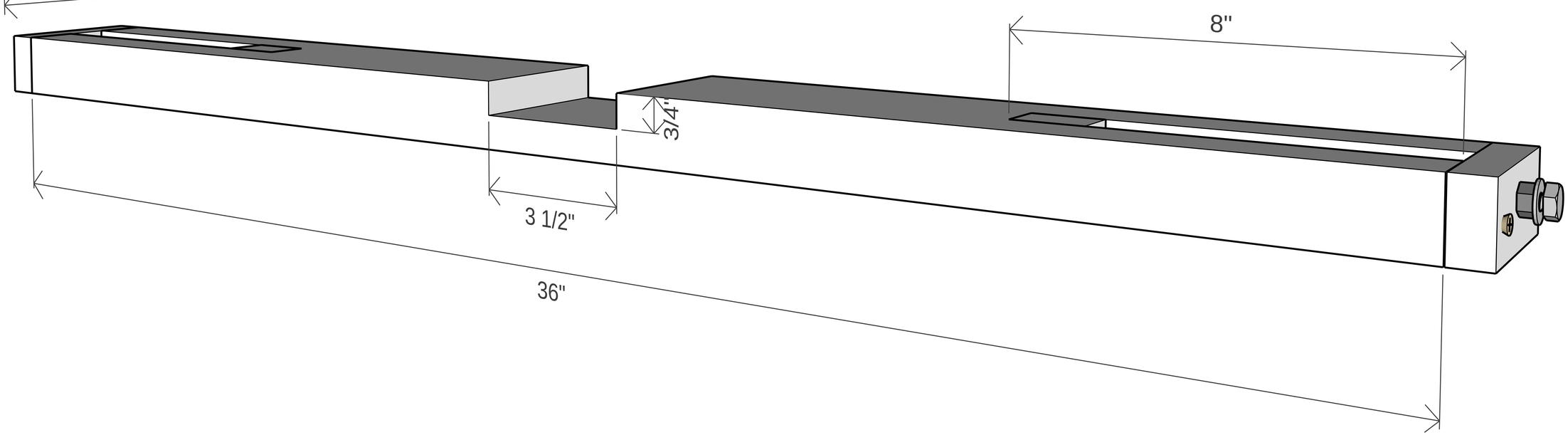
8"
3/4"
3 1/2"
36"

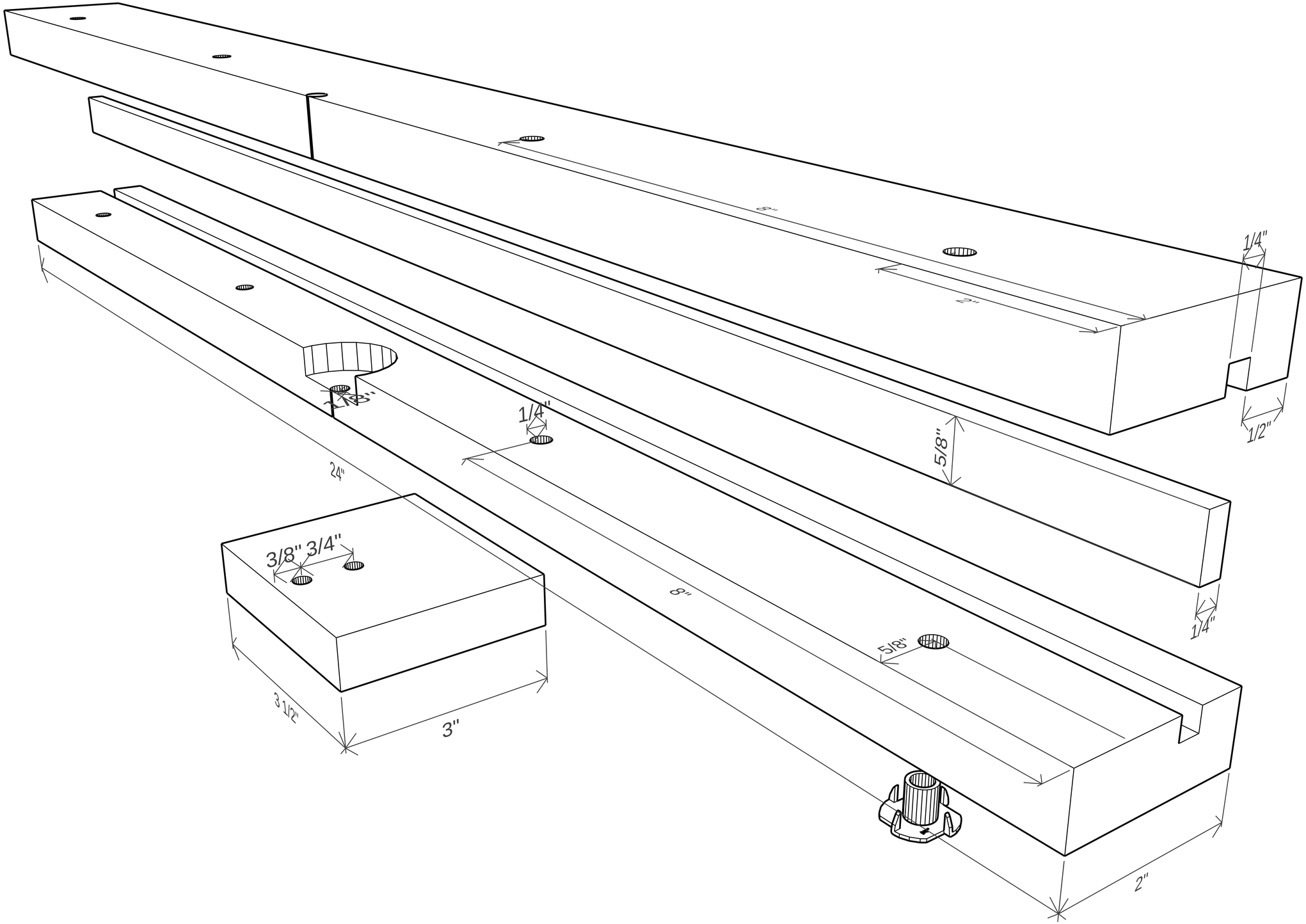
8"
2"
1/4"
1/2"
5/8"
1/4"
1/8"
1/4"
24"
3/8"
3/4"
8"
5/8"
3 1/2"
3"
2"

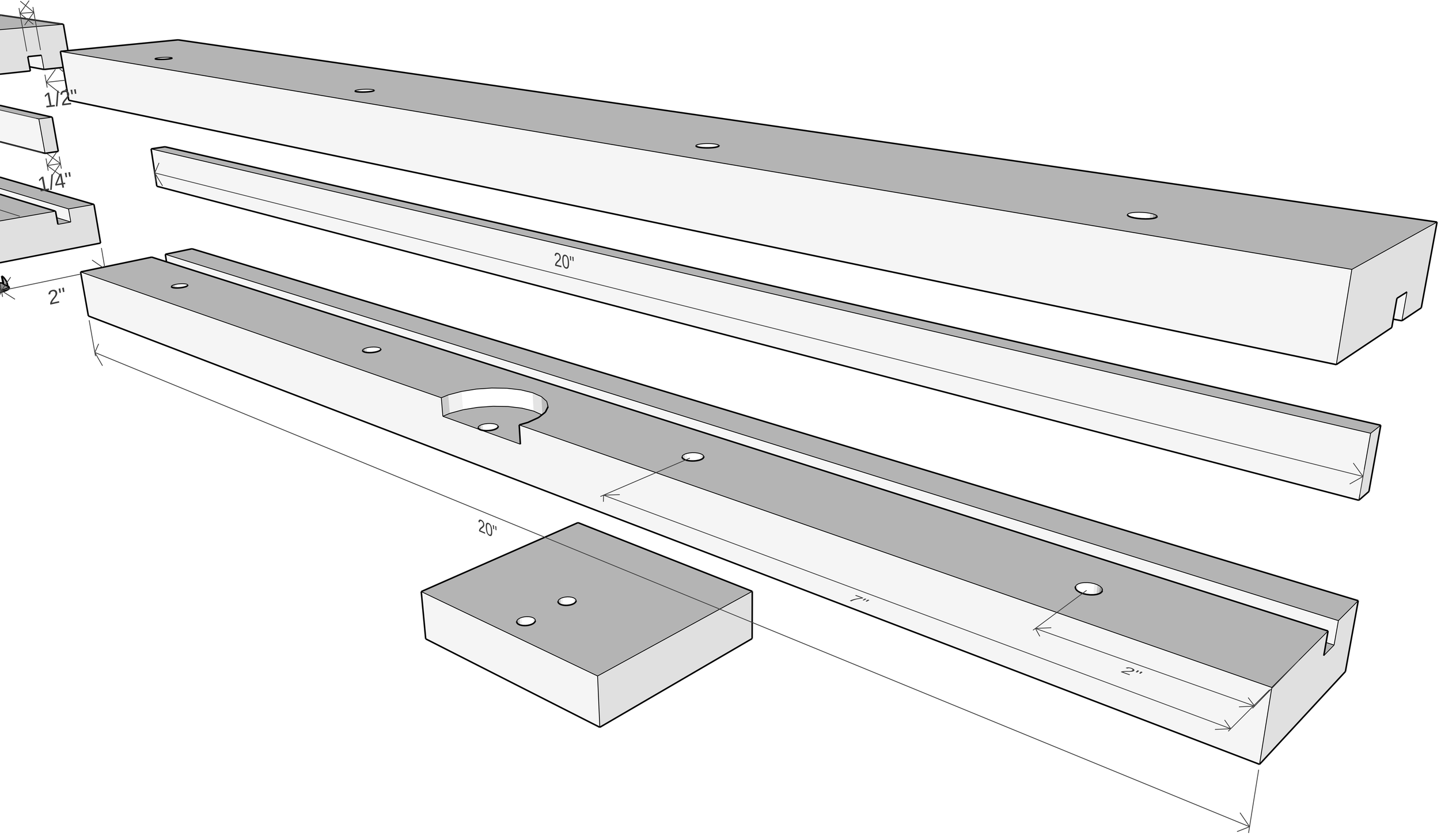
1/2"
1/4"
2"
20"
20"
7"
2"

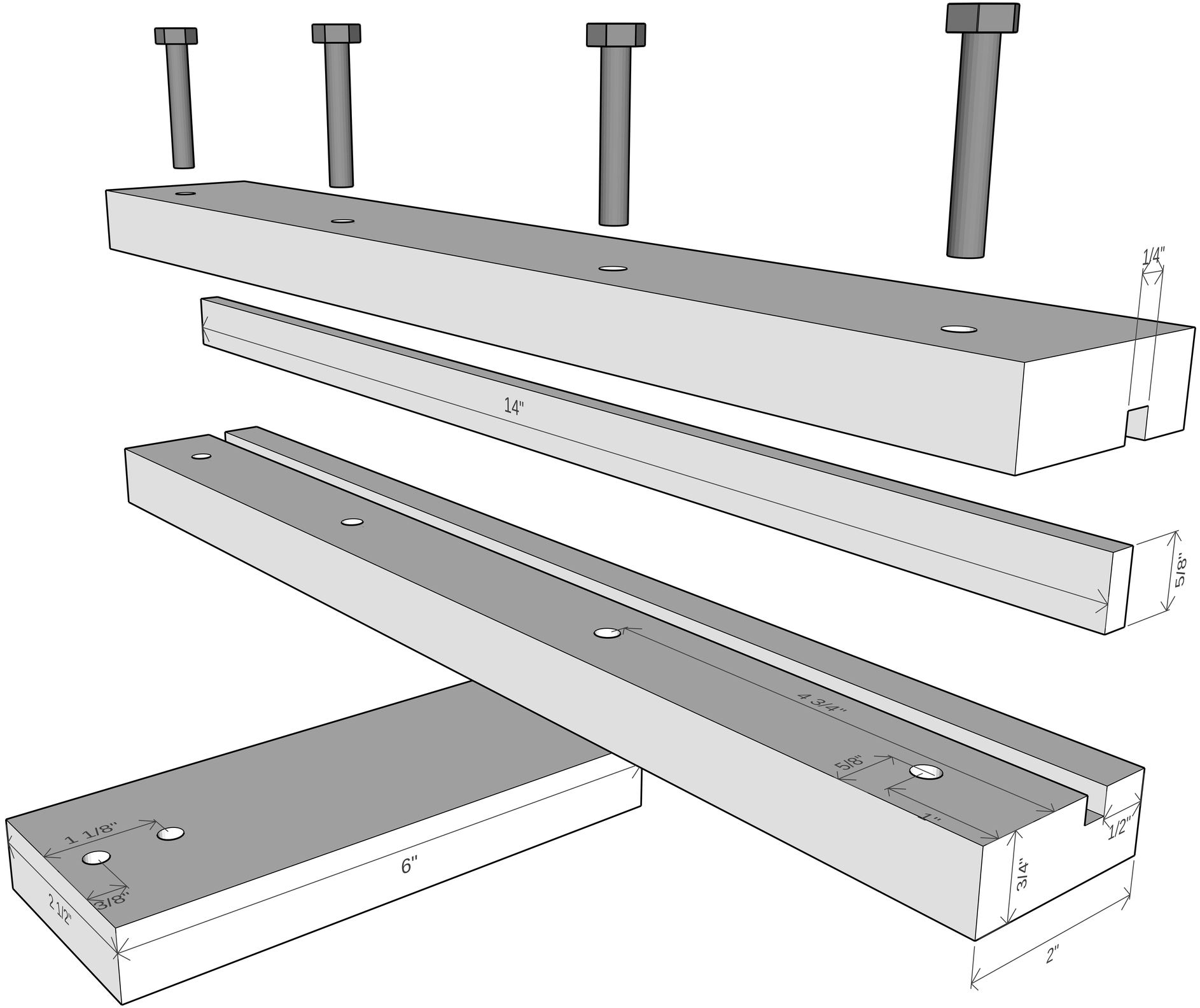
1/4"
14"
5/8"
4 3/4"
5/8"
1"
1/2"
3/4"
2"
1 1/8"
3/8"
2 1/2"
6"

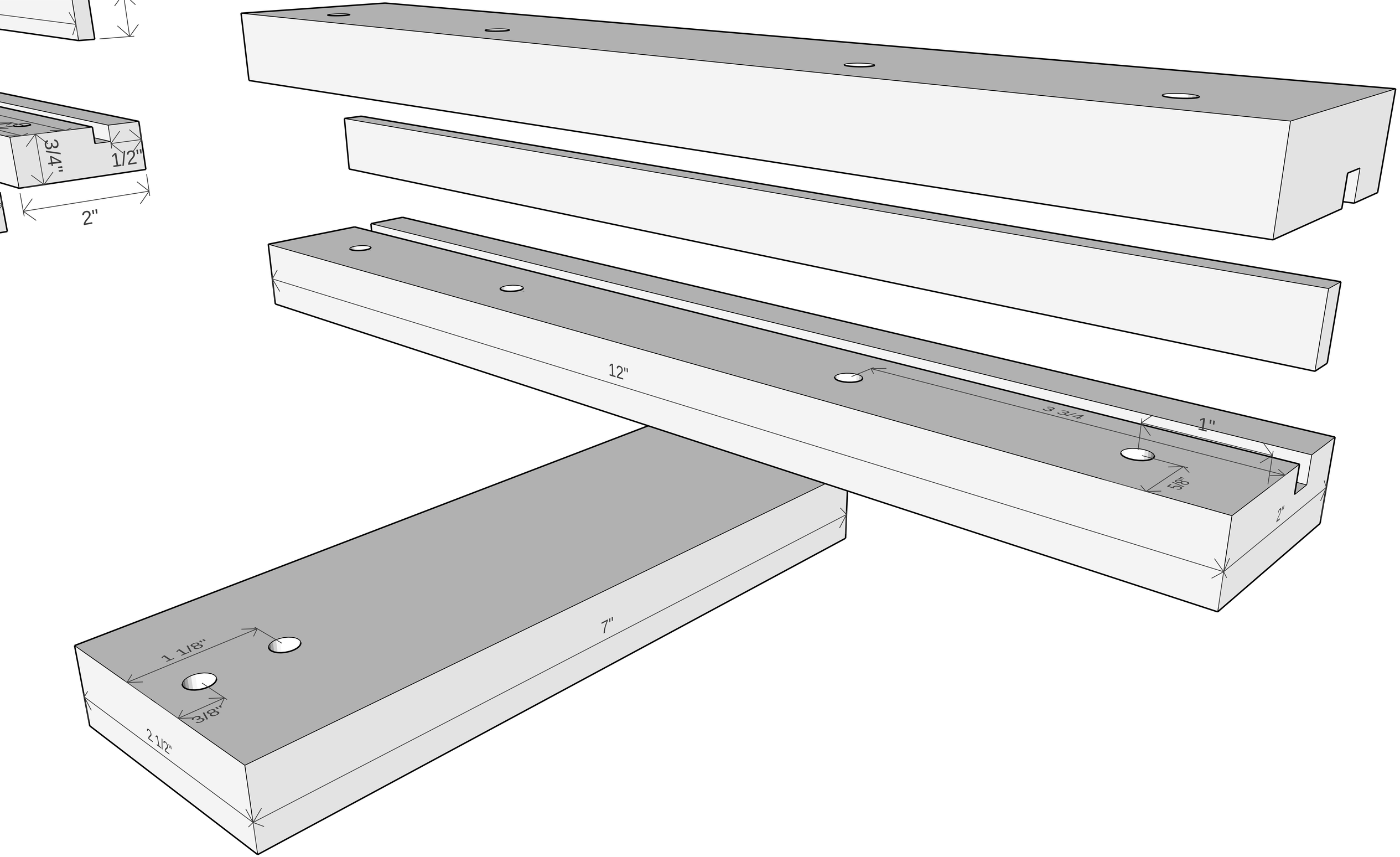
3/4"
1/2"
2"
12"
3 3/4
1"
5/8"
2"
7"
1 1/8"
3/8"
2 1/2"

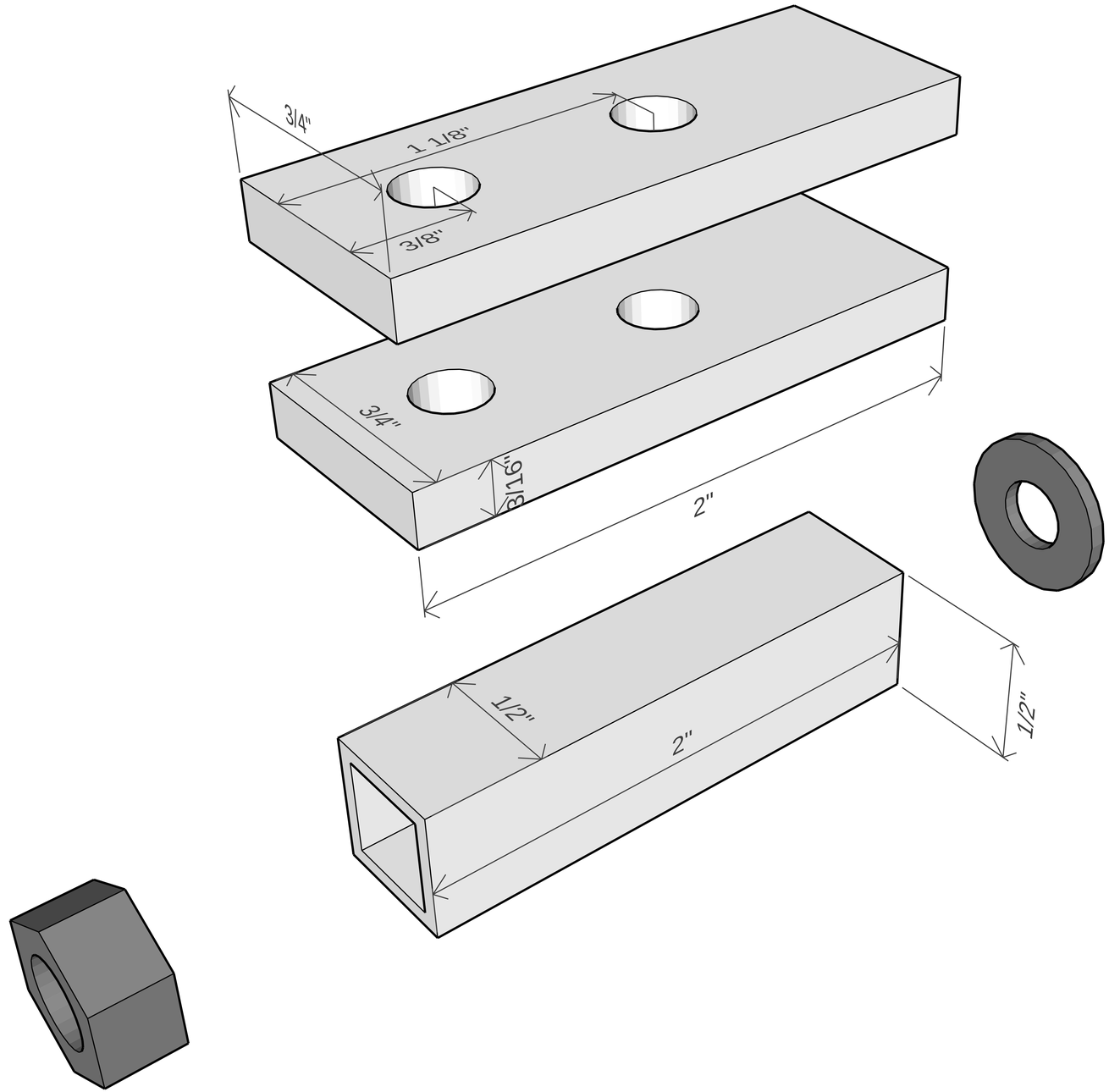
3/4"
1 1/8"
3/8"
3/4"
3/16"
2"
1/2"
2"
1/2"

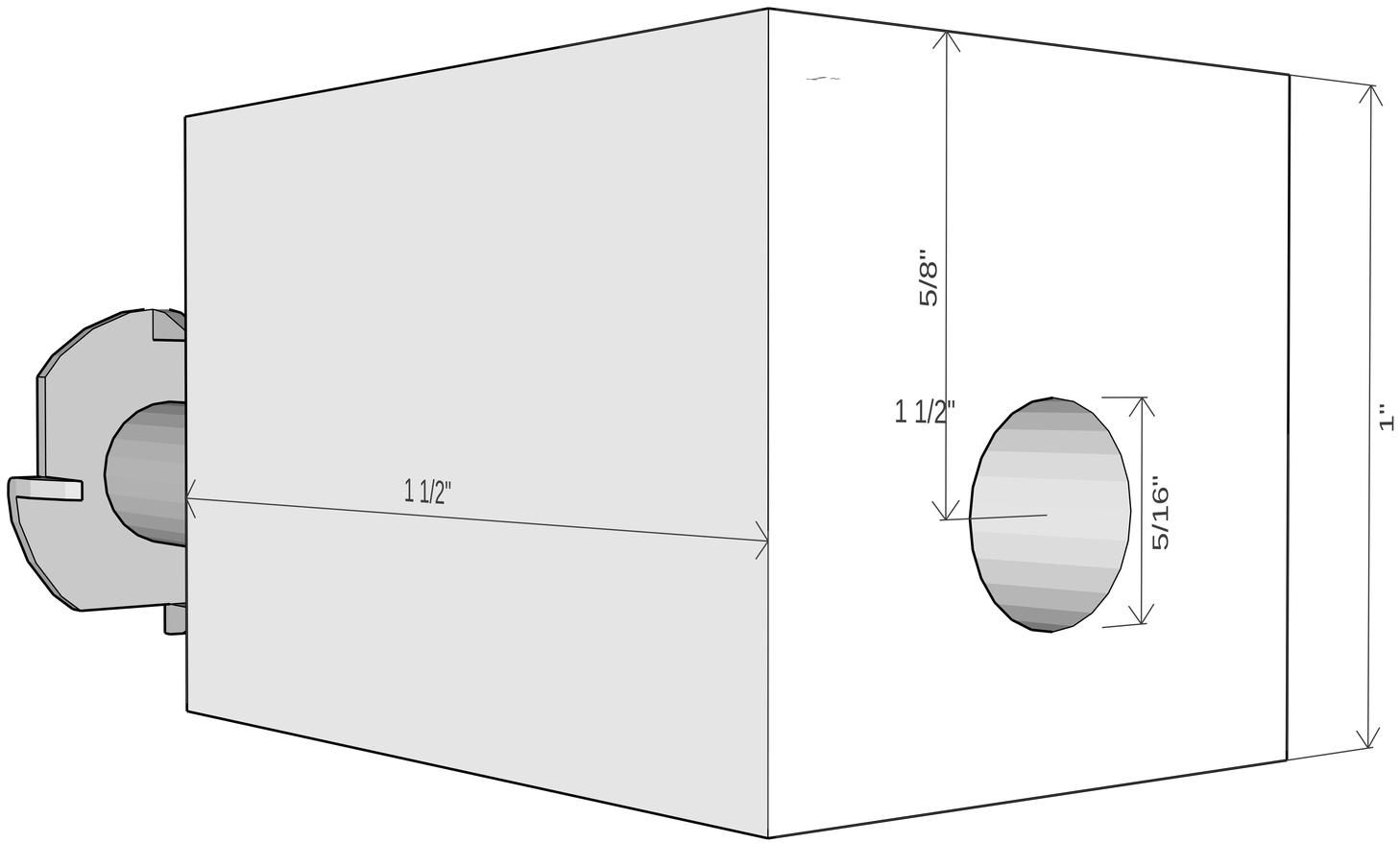
5/8"
1 1/2"
1 1/2"
5/16"
1"